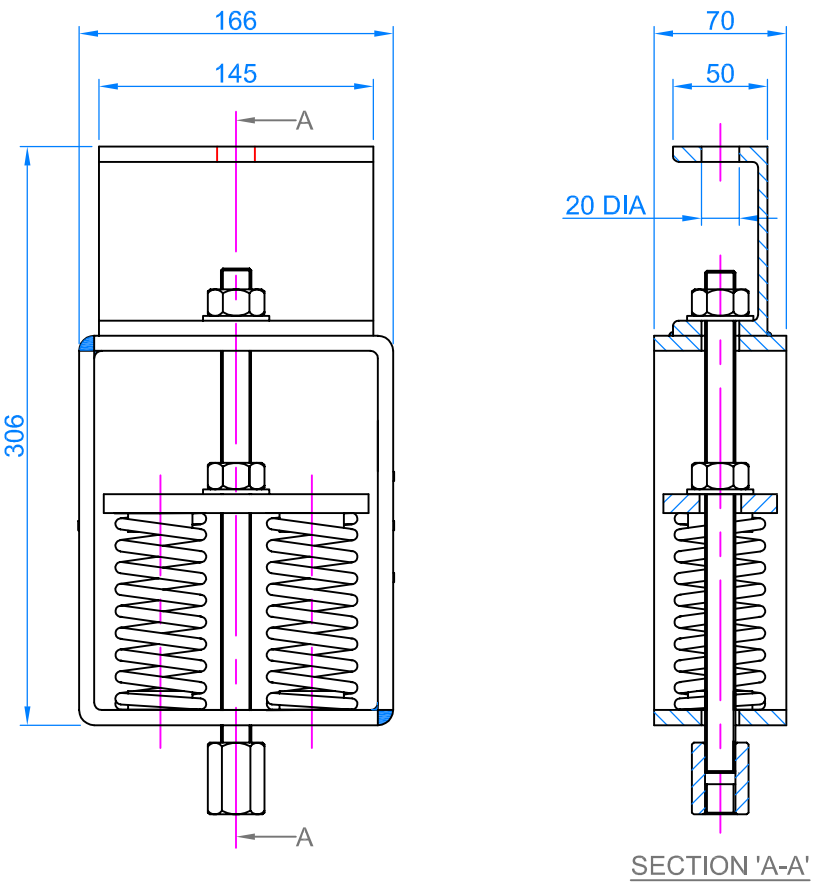

COLOUR	GREEN	WHITE	BLUE	RED	BLACK	ORANGE	PLAIN
LOAD @ 38mm OPTIMUM DEFLECTION	110lbs 50kgs	209lbs 95kgs	242lbs 110kgs	425lbs 193kgs	568lbs 258kgs	733lbs 333kgs	882lbs 401kgs
LOAD @ 50mm MAXIMUM DEFLECTION	146lbs 66kgs	275lbs 125kgs	319lbs 145kgs	560lbs 254kgs	784lbs 340kgs	964lbs 438kgs	1161lbs 528kgs

NOTES:

TITLE:

DATA SHEET
MPLCH2-HD HANGER

Isolated Systems Limited
Adams Close, Heanor Gate Industrial Park, Heanor, Derbyshire, DE75 7SW
T +44 (0)1773 761226
F +44 (0)1773 760408
E sales@isolatedsystems.com
www.isolatedsystems.com

REV	DATE	REVISION DETAIL	DRN	CHK'D	APP'D
A	01/07/14	TEXT & BORDER UPDATED	M.T.	G.F.	J.D.
0	08/09/05	CREATED	G.F.	J.D.	J.D.

MPLCH2-HD HANGER | A