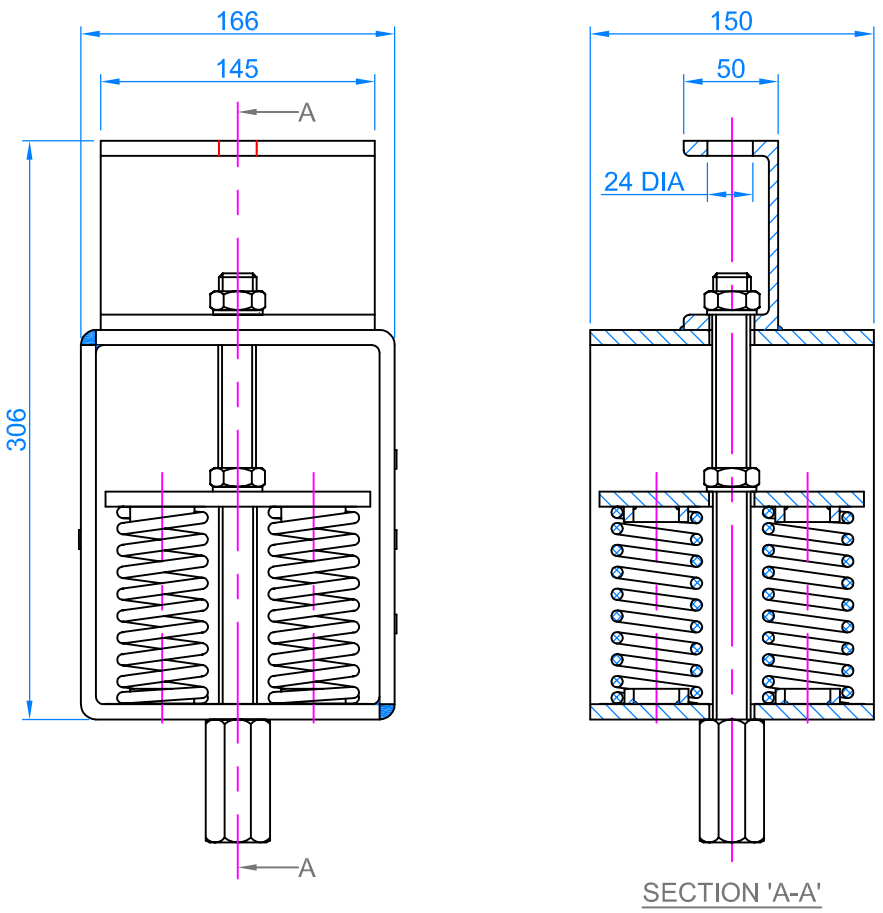

COLOUR	GREEN	WHITE	BLUE	RED	BLACK	PLAIN	YELLOW
LOAD @ 25mm OPTIMUM DEFLECTION	224lbs 102kgs	320lbs 146kgs	528lbs 240kgs	792lbs 360kgs	1120lbs 509kgs	2208lbs 1004kgs	2912lbs 1324kgs
LOAD @ 38mm MAXIMUM DEFLECTION	336lbs 152kgs	480lbs 218kgs	792lbs 360kgs	1188lbs 540kgs	1680lbs 764kgs	3312lbs 1505kgs	4368lbs 1985kgs

NOTES:

TITLE:

DATA SHEET
MPLCH4 HANGER

Isolated Systems Limited
Adams Close, Heanor Gate Industrial Park, Heanor, Derbyshire, DE75 7SW
T +44 (0)1773 761226
F +44 (0)1773 760408
E sales@isolatedsystems.com
www.isolatedsystems.com

REV	DATE	REVISION DETAIL	DRN	CHK'D	APP'D
A	27/06/14	TEXT & BORDER UPDATED	M.T.	G.F.	J.D.
0	08/09/05	CREATED	G.F.	J.D.	J.D.

MPLCH4 HANGER | A