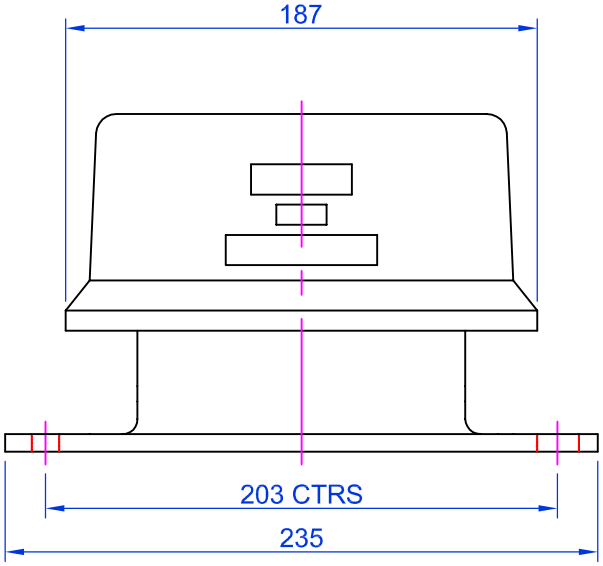

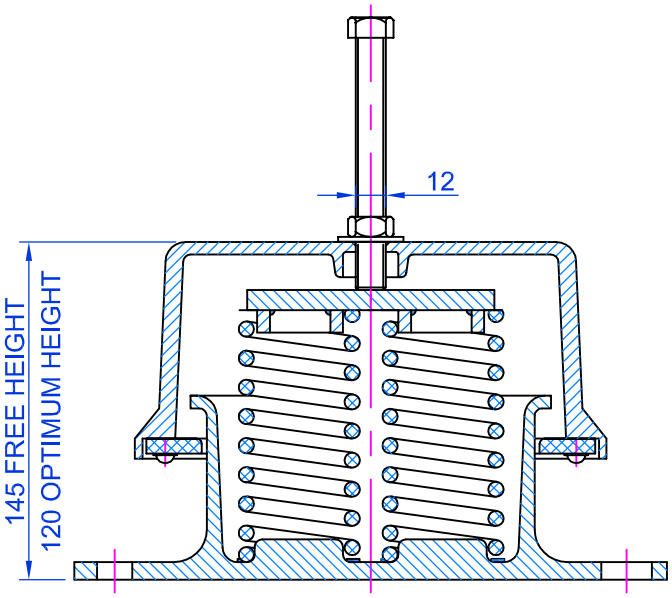

SECTION 'A-A'

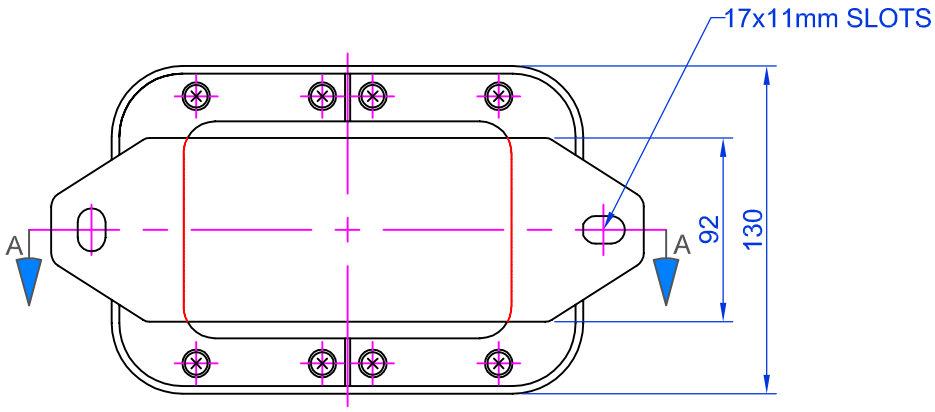

COLOUR	GREEN	WHITE	BLUE	RED	BLACK	PLAIN	YELLOW
LOAD @ 25mm OPTIMUM DEFLECTION	112lbs 51kgs	160lbs 73kgs	264lbs 120kgs	396lbs 180kgs	560lbs 254kgs	1104lbs 502kgs	1456lbs 662kgs
LOAD @ 38mm MAXIMUM DEFLECTION	168lbs 76kgs	240lbs 109kgs	396lbs * 180kgs	594lbs 270kgs	840lbs 382kgs	1656lbs 752kgs	2184lbs 992kgs

NOTES: * MOUNT IS ONLY CAPABLE OF 37mm DEFLECTION AT WHICH IT IS SOLID

TITLE:

DATA SHEET
MS2 MOUNT

Isolated Systems Limited
Adams Close, Heanor Gate Industrial Park, Heanor, Derbyshire, DE75 7SW
T +44 (0)1773 761226
F +44 (0)1773 760408
E sales@isolatedsystems.com
www.isolatedsystems.com

REV	DATE	REVISION DETAIL	DRN	CHK'D	APP'D
A	26/06/14	TEXT & BORDER UPDATED	M.T.	G.F.	J.D.
0	06/09/05	CREATED	G.F.	J.D.	J.D.

MS2 MOUNT | A