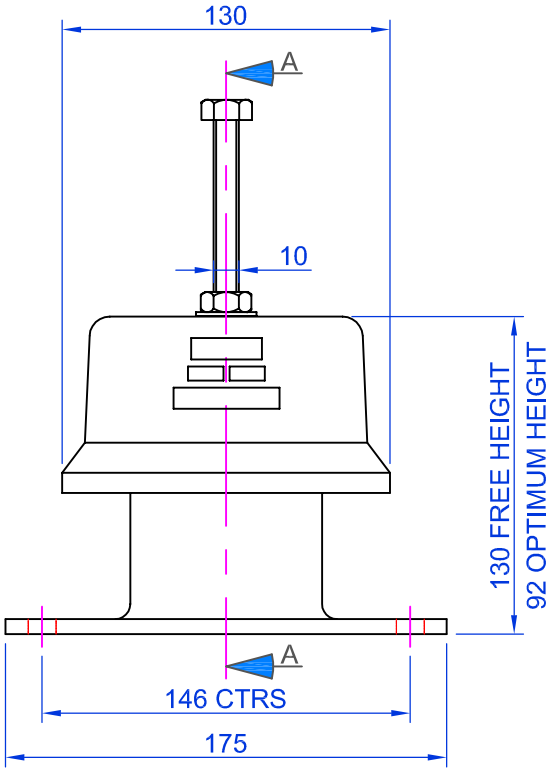

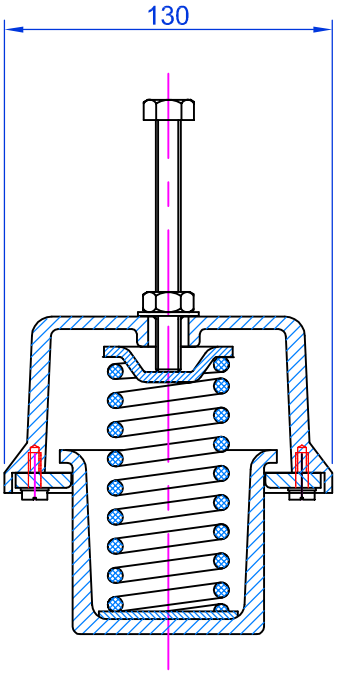

SECTION 'A-A'

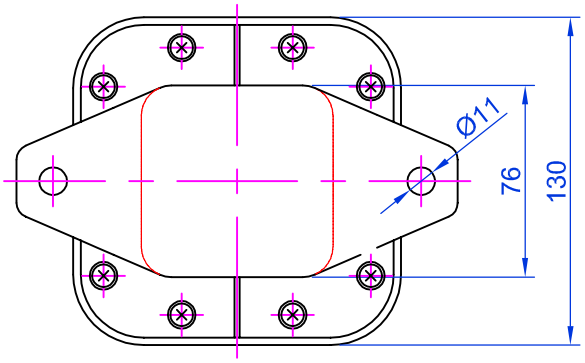

COLOUR	GREEN	WHITE	BLUE	RED	BLACK	ORANGE	PLAIN
LOAD @ 38mm OPTIMUM DEFLECTION	55lbs 25kgs	104.5lbs 47.5kgs	121lbs 55kgs	212.5lbs 96.5kgs	284lbs 129kgs	366.5lbs 166.5kgs	441lbs 200.5kgs
LOAD @ 50mm MAXIMUM DEFLECTION	73lbs 33kgs	137.5lbs* 62.5kgs	159.5lbs 72.5kgs	280lbs 127kgs	374lbs 170kgs	482lbs 219kgs	580.5lbs 264kgs

NOTES: * MOUNT IS ONLY CAPABLE OF 50mm DEFLECTION AT WHICH IT IS SOLID

TITLE:

DATA SHEET
MS1-HD MOUNT

Isolated Systems Limited
Adams Close, Heanor Gate Industrial Park, Heanor, Derbyshire, DE75 7SW
T +44 (0)1773 761226
F +44 (0)1773 760408
E sales@isolatedsystems.com
www.isolatedsystems.com

REV	DATE	REVISION DETAIL	DRN	CHK'D	APP'D
A	26/06/14	TEXT & BORDER UPDATED	M.T.	G.F.	J.D.
0	07/09/05	CREATED	G.F.	J.D.	J.D.

MS1-HD MOUNT | A