DRAWING No: OS2/IL | A

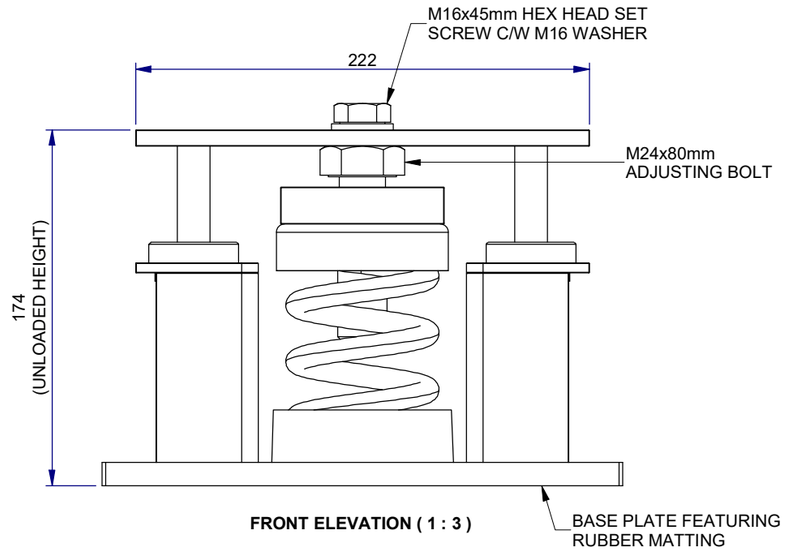

FRONT ELEVATION (1 : 3)

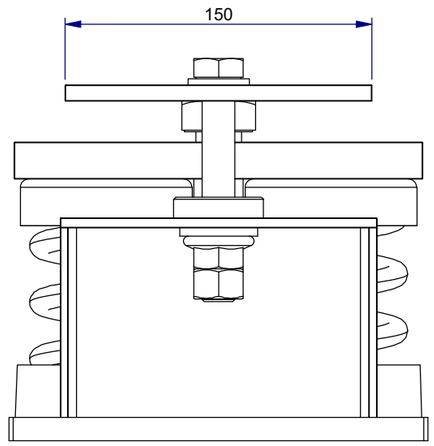

VARIANT TABLE

AVM VARIANT	LOAD KG / (N)	COLOUR CODE	OPTIMUM DEFLECTION (mm)	VERTICAL RIGIDITY (kg/mm)
OS2/IL-600-PR	600 / (5886)	Purple	20 - 25	24.00
OS2/IL-720-RD	720 / (7063)	Red	20 - 25	28.80
OS2/IL-900-WH	900 / (8829)	White	20 - 25	36.00
OS2/IL-1100-GN	1100 / (10791)	Green	20 - 25	44.00
OS2/IL-1300-LB	1300 / (12753)	Light Blue	20 - 25	52.00
OS2/IL-1500-DB	1500 / (14715)	Dark Brown	20 - 25	60.00
OS2/IL-1700-CL	1700 / (16677)	Claret	20 - 25	68.00
OS2/IL-1900-PK	1900 / (18639)	Pink	20 - 25	76.00
OS2/IL-2100-GY	2100 / (20601)	Grey	20 - 25	84.00
OS2/IL-2400-LG	2400 / (23544)	Light Green	20 - 25	96.00
OS2/IL-2700-BK	2700 / (26487)	Black	20 - 25	108.00

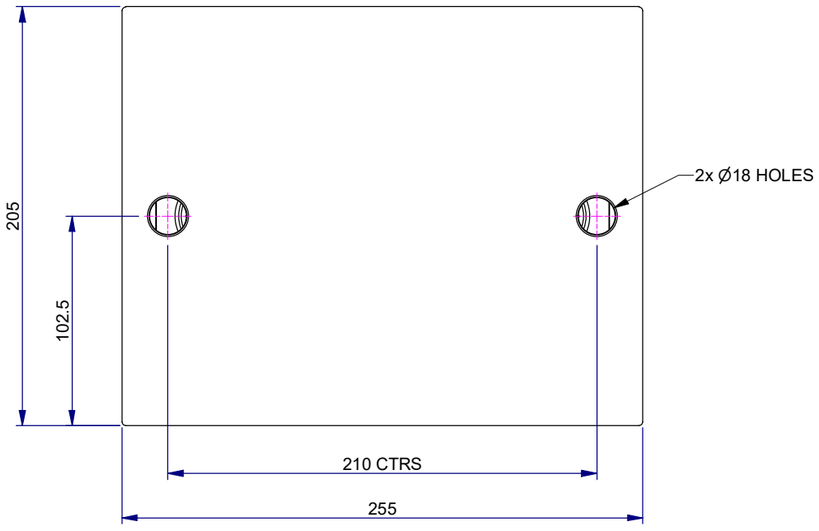

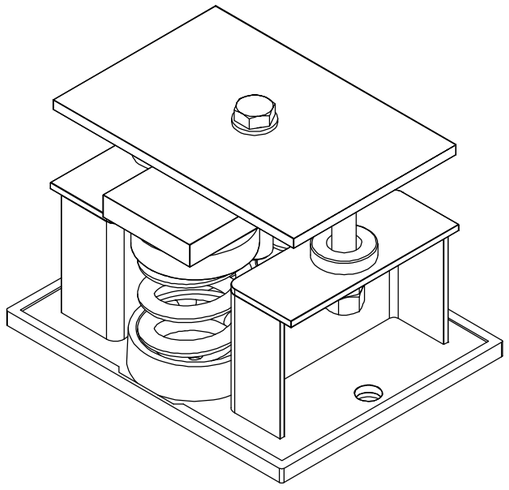

ISOMETRIC VIEW (1 : 4)

INFORMATION ONLY

GENERAL NOTES

1. OPERATING TEMPERATURE RANGE: **-20°C TO +80°C**
2. EACH AVM SUPPLIED C/W INSTALLATION INSTRUCTIONS.
3. FINISH (GENERAL): **COATED GREY WITH ZINC PLATED ELEMENTS**
4. FINISH (SPRING): **COATED (SEE VARIANT TABLE FOR COLOUR)**

TOLERANCES:

NOTICE:

THIS DRAWING IS THE PROPERTY OF ISL, LOANED SUBJECT TO THE CONDITIONS THAT IT SHALL NOT BE COPIED, REPRODUCED, LOANED OR SUBMITTED TO OUTSIDE PARTIES FOR EXAMINATION WITHOUT WRITTEN CONSENT

REVISION

REV	DESCRIPTION	DATE	AUTHOR	APPROVED
A	BORDER CORRECTED.	21/06/2022	M.A.T.	P.M.

CLIENTS PROJECT: ISL INTERNAL

THIRD ANGLE

FIRST ORDER NO: N / A

DR REF NO: OS2/IL

ISL
ISOLATED SYSTEMS LTD, ADAMS CLOSE, HEANOR GATE INDUSTRIAL PARK, HEANOR, DERBYSHIRE, DE75 7SW
T. +44 (0)1773 761226 E. sales@isolatedsystems.com
www.isolatedsystems.com

SCALE: R.T.D.

DRAWN BY: M.A.T.	DATE: 19/04/2022	
CHECKED BY: P.M.	DATE: 23/05/2022	
APPROVED BY: P.M.	DATE: 23/05/2022	

TITLE: OS2/IL INTERNAL LEVELLING AVM (GENERAL SPECIFICATION)

DRAWING No: OS2/IL

A3

A

C:\Vault\Designs\Isolated Systems Ltd\Anti Vibration Mounts\OS2_IL\OS2_IL.idw