DRAWING No: OS1E-HD/IL | A

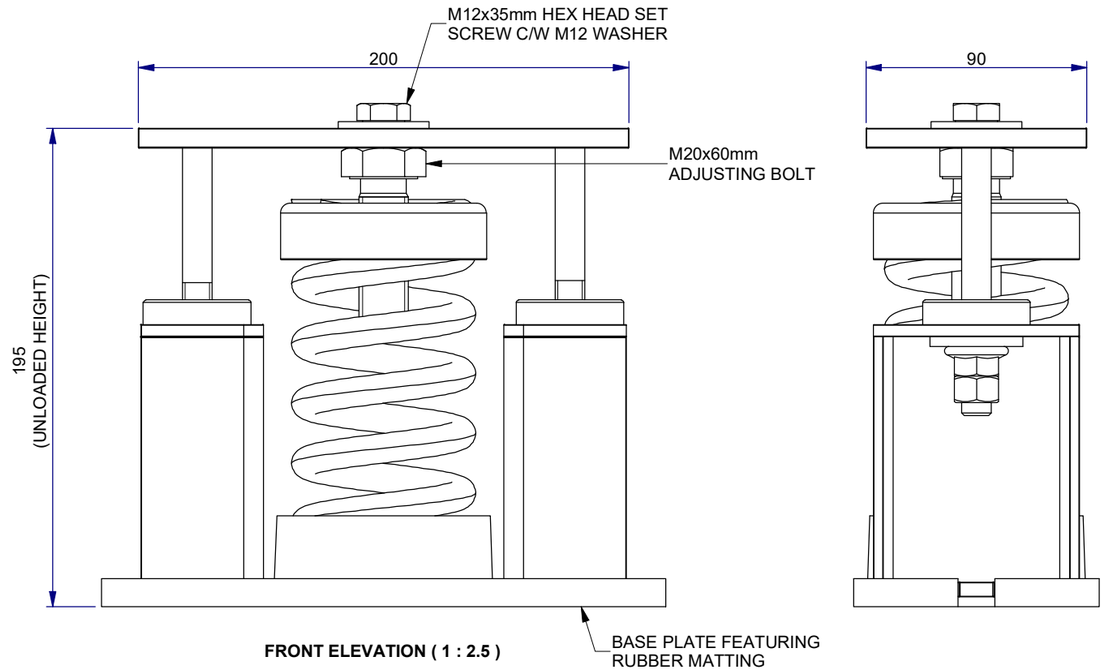

FRONT ELEVATION (1 : 2.5)

VARIANT TABLE				
AVM VARIANT	**LOAD KG / (N)**	**COLOUR CODE**	**OPTIMUM DEFLECTION (mm)**	**VERTICAL RIGIDITY (kg/mm)**
OS1E-HD/IL-320-LG	320 / (3139)	Light Green	40 - 50	6.40
OS1E-HD/IL-400-OR	400 / (3924)	Orange	40 - 50	8.00
OS1E-HD/IL-500-MB	500 / (4905)	Medium Blue	40 - 50	10.00
OS1E-HD/IL-550-WH	550 / (5396)	White	40 - 50	11.00
OS1E-HD/IL-600-GN	600 / (5886)	Green	40 - 50	12.00
OS1E-HD/IL-650-RD	650 / (6377)	Red	40 - 50	13.00
OS1E-HD/IL-750-PR	750 / (7358)	Purple	40 - 50	15.00
OS1E-HD/IL-800-YW	800 / (7848)	Yellow	40 - 50	16.00
OS1E-HD/IL-850-LB	850 / (8339)	Light Blue	40 - 50	17.00
OS1E-HD/IL-920-PK	920 / (9025)	Pink	40 - 50	18.40
OS1E-HD/IL-1050-GY	1050 / (10301)	Grey	40 - 50	21.00
OS1E-HD/IL-1200-BU	1200 / (11772)	Blue	40 - 50	24.00
OS1E-HD/IL-1350-BK	1350 / (13244)	Black	40 - 50	27.00
OS1E-HD/IL-1600-DB	1600 / (15696)	Dark Brown	40 - 50	32.00

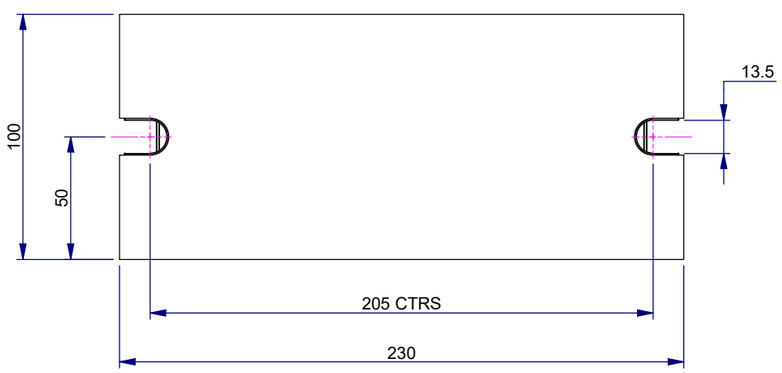

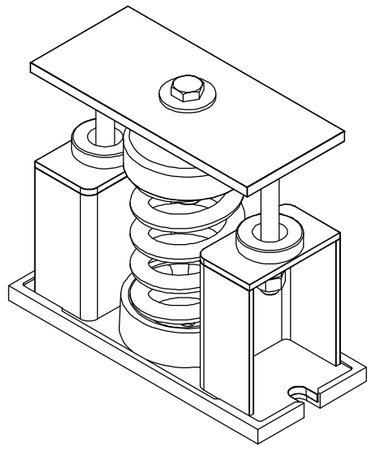

ISOMETRIC VIEW (1 : 4)

INFORMATION ONLY

GENERAL NOTES

1. OPERATING TEMPERATURE RANGE: **-20°C TO +80°C**
2. EACH AVM SUPPLIED C/W INSTALLATION INSTRUCTIONS.
3. FINISH (GENERAL): **COATED GREY WITH ZINC PLATED ELEMENTS**
4. FINISH (SPRING): **COATED (SEE VARIANT TABLE FOR COLOUR)**

TOLERANCES:

NOTICE:

THIS DRAWING IS THE PROPERTY OF ISL, LOANED SUBJECT TO THE CONDITIONS THAT IT SHALL NOT BE COPIED, REPRODUCED, LOANED OR SUBMITTED TO OUTSIDE PARTIES FOR EXAMINATION WITHOUT WRITTEN CONSENT

REVISION

REV	DESCRIPTION	DATE	AUTHOR	APPROVED
A	OPTIMUM VALUE AND BORDER CORRECTED.	21/06/2022	M.A.T.	P.M.

CLIENTS PROJECT: ISL INTERNAL

THIRD ANGLE

FIRST ORDER NO: N / A

DR REF NO: OS1E-HD/IL

ISL
ISOLATED SYSTEMS LTD, ADAMS CLOSE, HEANOR GATE INDUSTRIAL PARK, HEANOR, DERBYSHIRE, DE75 7SW
T. +44 (0)1773 761226 E. sales@isolatedsystems.com
www.isolatedsystems.com

SCALE: R.T.D.

DRAWN BY: M.A.T.	DATE: 17/05/2022	
CHECKED BY: P.M.	DATE: 23/05/2022	
APPROVED BY: P.M.	DATE: 23/05/2022	

TITLE: OS1E-HD/IL INTERNAL LEVELLING AVM (GENERAL SPECIFICATION)

DRAWING No: OS1E-HD/IL

A3

A

C:\Vault\Designs\Isolated Systems Ltd\Anti Vibration Mounts\OS1E-HD_IL\OS1E-HD_IL.idw