DRAWING No: OS1/IL | A

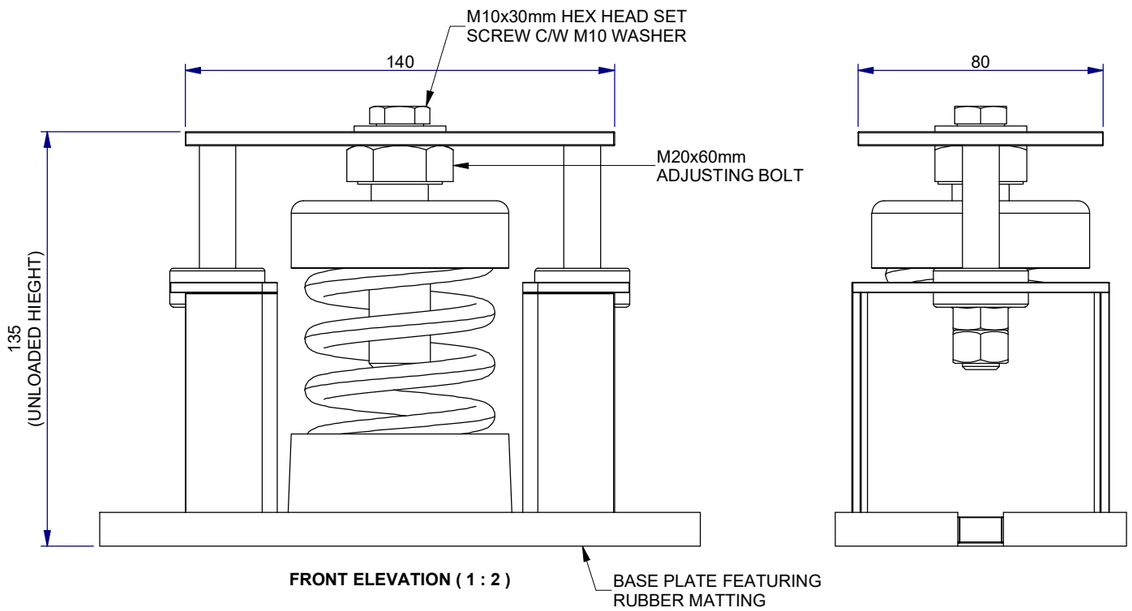

FRONT ELEVATION (1 : 2)

VARIANT TABLE				
AVM VARIANT	**LOAD KG / (N)**	**COLOUR CODE**	**OPTIMUM DEFLECTION (mm)**	**VERTICAL RIGIDITY (kg/mm)**
OS1/IL-10-YW	10 / (98)	Yellow	20 - 25	0.40
OS1/IL-20-DG	20 / (196)	Dark Grey	20 - 25	0.80
OS1/IL-30-BK	30 / (294)	Black	20 - 25	1.20
OS1/IL-40-RD	40 / (392)	Red	20 - 25	1.60
OS1/IL-50-WH	50 / (491)	White	20 - 25	2.00
OS1/IL-60-GY	60 / (589)	Grey	20 - 25	2.40
OS1/IL-70-MB	70 / (687)	Medium Blue	20 - 25	2.80
OS1/IL-80-LG	80 / (785)	Light Green	20 - 25	3.20
OS1/IL-100-PR	100 / (981)	Purple	20 - 25	4.00
OS1/IL-120-PK	120 / (1177)	Pink	20 - 25	4.80
OS1/IL-140-OR	140 / (1373)	Orange	20 - 25	5.60
OS1/IL-160-TN	160 / (1570)	Tan	20 - 25	6.40
OS1/IL-180-LB	180 / (1766)	Light Blue	20 - 25	7.20
OS1/IL-200-BU	200 / (1962)	Blue	20 - 25	8.00
OS1/IL-230-CL	230 / (2256)	Claret	20 - 25	9.20
OS1/IL-250-PG	250 / (2453)	Pea Green	20 - 25	10.00
OS1/IL-300-BN	300 / (2943)	Brown	20 - 25	12.00
OS1/IL-330-DB	330 / (3237)	Dark Brown	20 - 25	13.20
OS1/IL-360-GN	360 / (3532)	Green	20 - 25	14.40
OS1/IL-400-SV	400 / (3924)	Silver	20 - 25	16.00
OS1/IL-500-JG	500 / (4905)	Jade Green	20 - 25	20.00

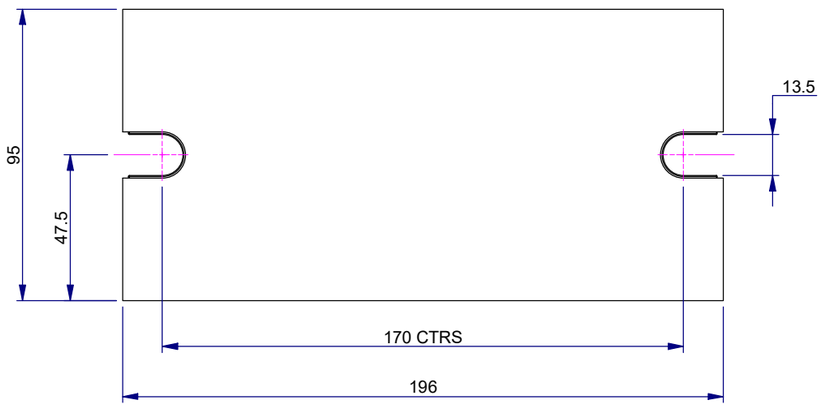

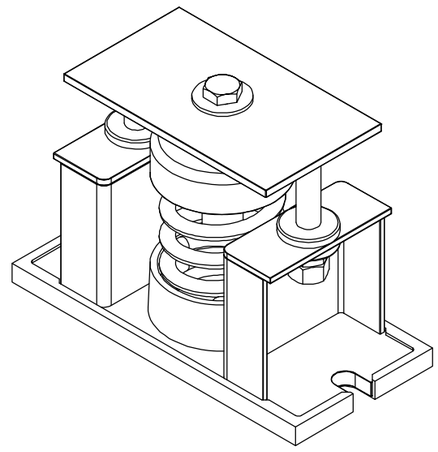

ISOMETRIC VIEW (1 : 3)

INFORMATION ONLY

GENERAL NOTES

1. OPERATING TEMPERATURE RANGE: **-20°C TO +80°C**
2. EACH AVM SUPPLIED C/W INSTALLATION INSTRUCTIONS.
3. FINISH (GENERAL): **COATED GREY WITH ZINC PLATED ELEMENTS**
4. FINISH (SPRING): **COATED (SEE VARIANT TABLE FOR COLOUR)**

TOLERANCES:

NOTICE:

THIS DRAWING IS THE PROPERTY OF ISL, LOANED SUBJECT TO THE CONDITIONS THAT IT SHALL NOT BE COPIED, REPRODUCED, LOANED OR SUBMITTED TO OUTSIDE PARTIES FOR EXAMINATION WITHOUT WRITTEN CONSENT

REVISION

REV	DESCRIPTION	DATE	AUTHOR	APPROVED
A	BORDER CORRECTED.	21/06/2021	M.A.T.	P.M.

CLIENTS PROJECT: ISL INTERNAL

THIRD ANGLE

FIRST ORDER NO: N/ A

DR REF NO: OS1/IL

ISOLATED SYSTEMS LTD, ADAMS CLOSE, HEANOR GATE INDUSTRIAL PARK, HEANOR, DERBYSHIRE, DE75 7SW
T. +44 (0)1773 761226 E. sales@isolatedsystems.com
www.isolatedsystems.com

SCALE: R.T.D.

DRAWN BY: M.A.T.	DATE: 22/10/2021	
CHECKED BY: P.M.	DATE: 23/05/2022	
APPROVED BY: P.M.	DATE: 23/05/2022	

TITLE: OS1/IL INTERNAL LEVELLING AVM (GENERAL SPECIFICATION)

DRAWING No: OS1/IL

A3

A

C:\Vault\Designs\Isolated Systems Ltd\Anti Vibration Mounts\OS1_IL\OS1_IL.idw